TEAKWORKS4U™
www.teakworks4u.com

Wall Mount Bench
Order No. TBF-24W

156-B Galewski Drive | Winona, MN 55987 | 866.969.8325 | 507.452.1785 | fax: 507.858.0211 | www.teakworks4u.com

Top View

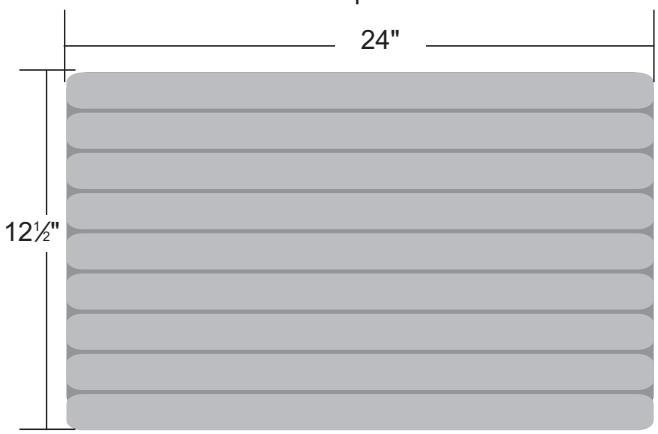

- Mounts directly to the shower wall
- 304 Stainless Steel wall brackets lock securely into place when the seat is lifted, yet folds down easily when not in use
- Brackets are set 16" on center
- Seat remains in raised position until you fold it down
- Low pressure spring action makes it easy to raise and lower the seat
- Rounded edges on seat battens for comfort and safety

Side View

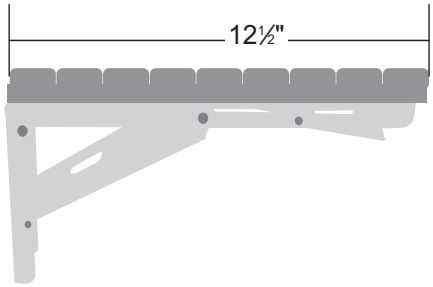

Dimensions:

- 24"W x 12 ½"D (609.6 x 317.5mm)

Bracket

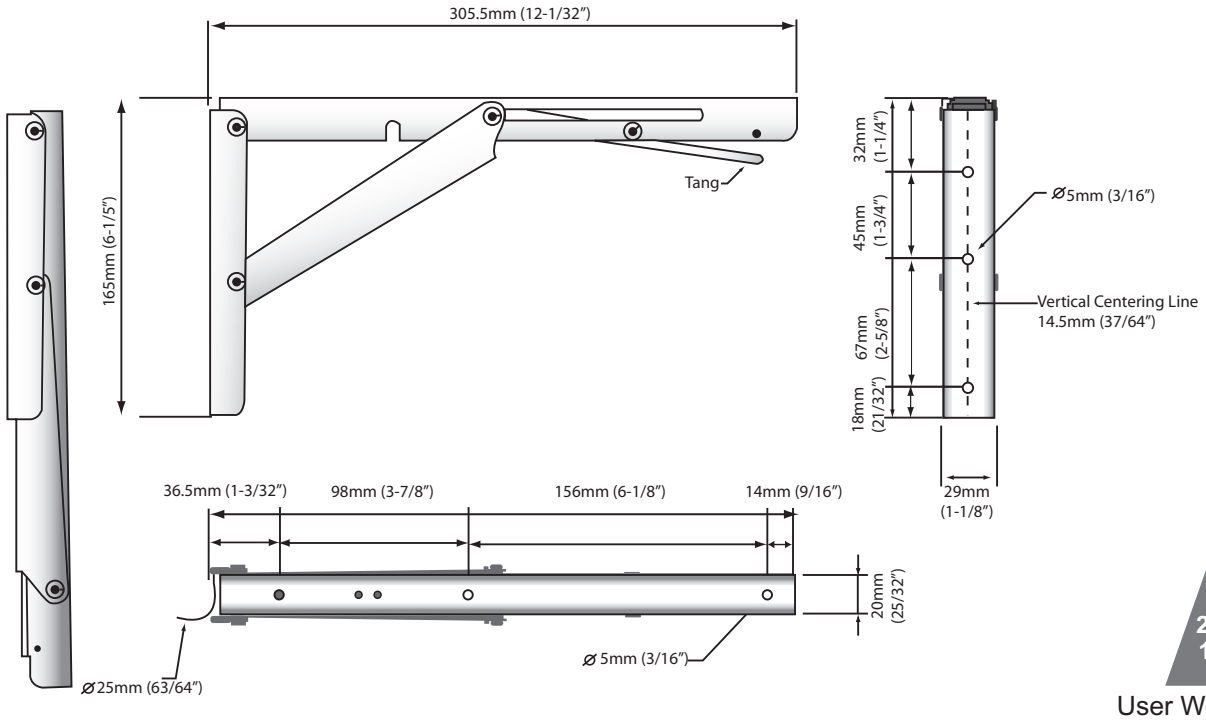

User Weight Capacity*